●USP-4 Reel

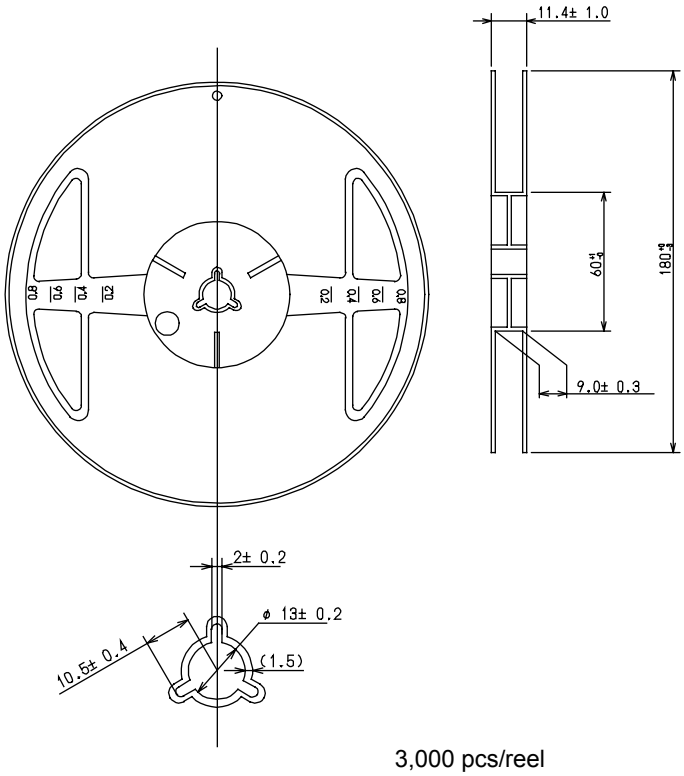


3,000 pcs/reel

●USP-4 Taping Specifications

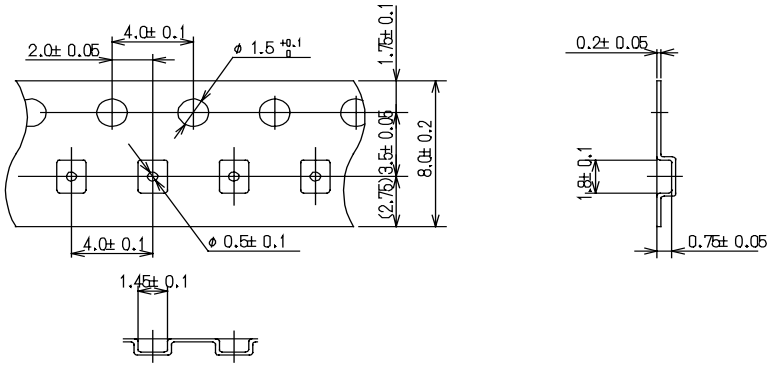


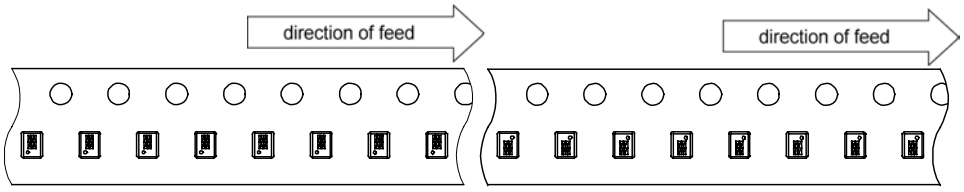


R Type : [Device orientation : Right]
Standard feed

L Type : [Device orientation : Left]
Reverse feed