Packaging Information / Reference Pattern Layout Dimensions

●USP-8A01

Unit: mm

■Packaging Information

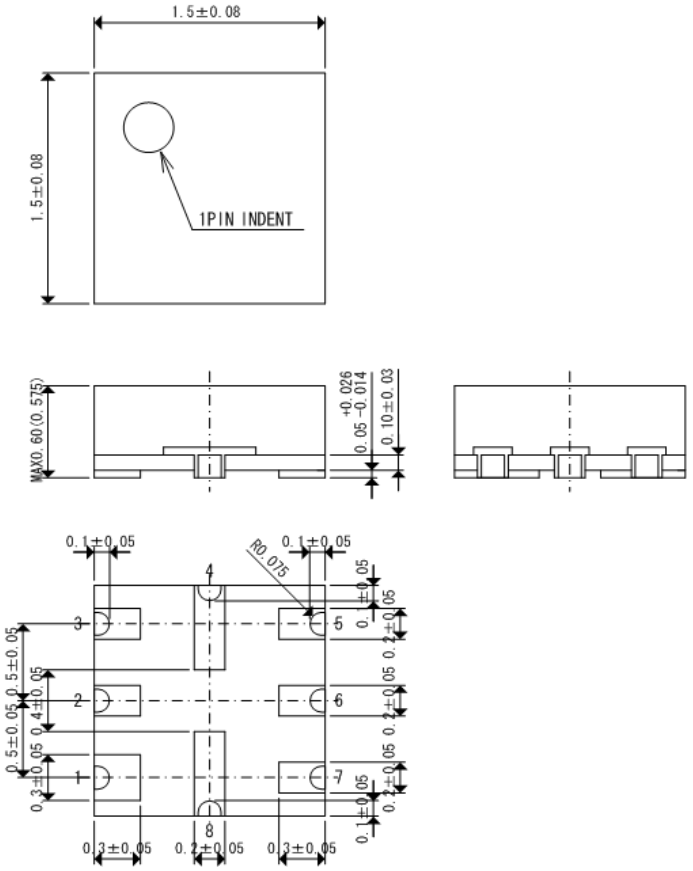

■Reference Pattern Layout Dimension

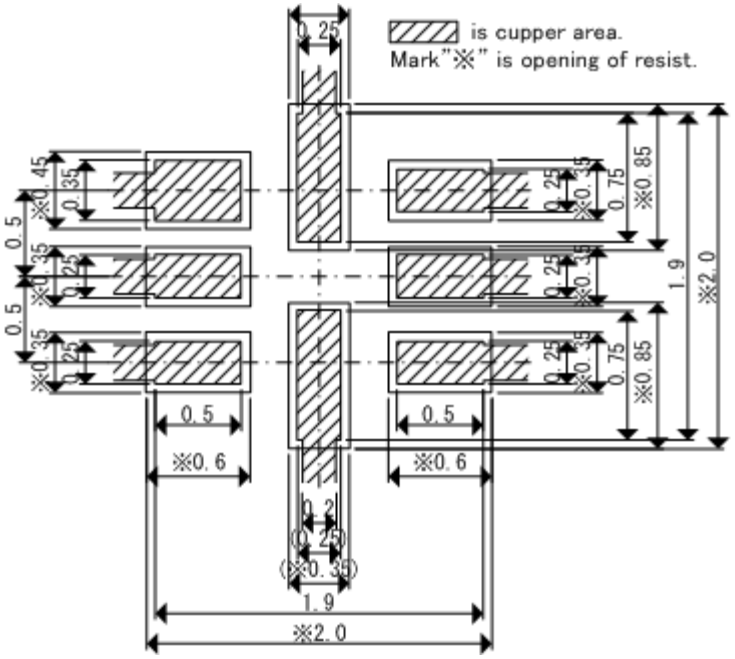
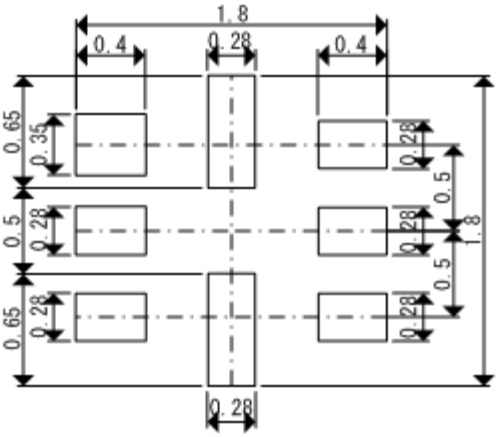
Reference metal mask design