Packaging Information / Reference Pattern Layout Dimensions

●SOT-89-5

Unit: mm

■Packaging Information

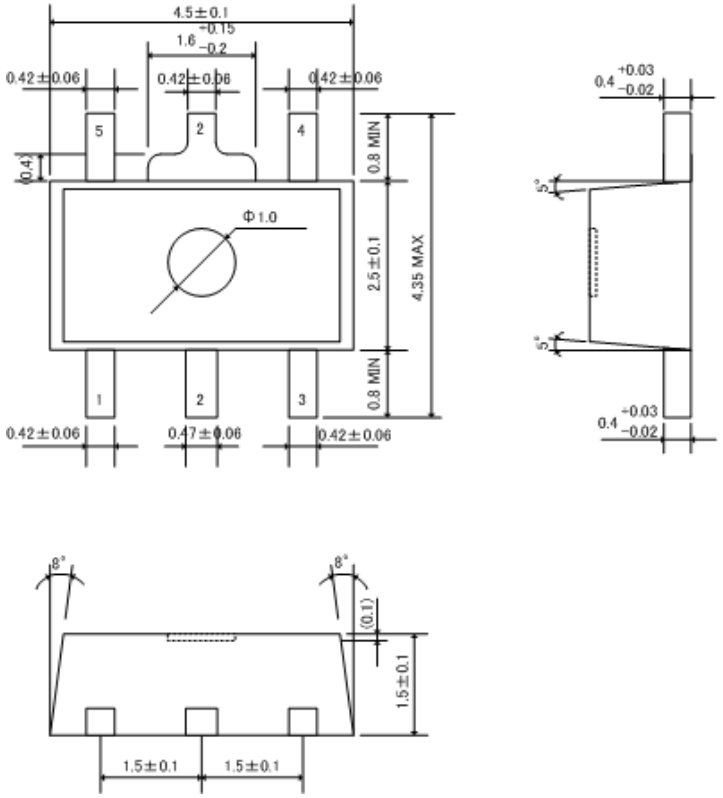
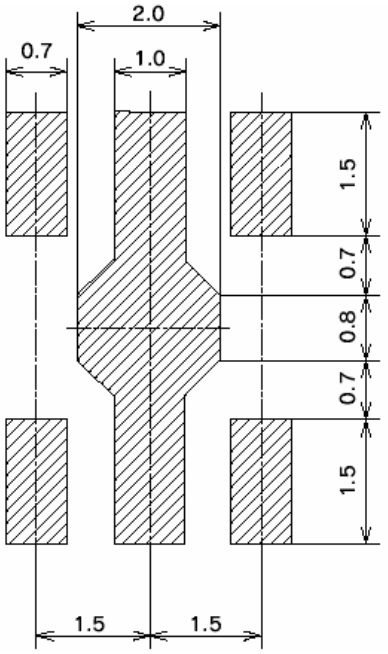
■Reference Pattern Layout Dimension