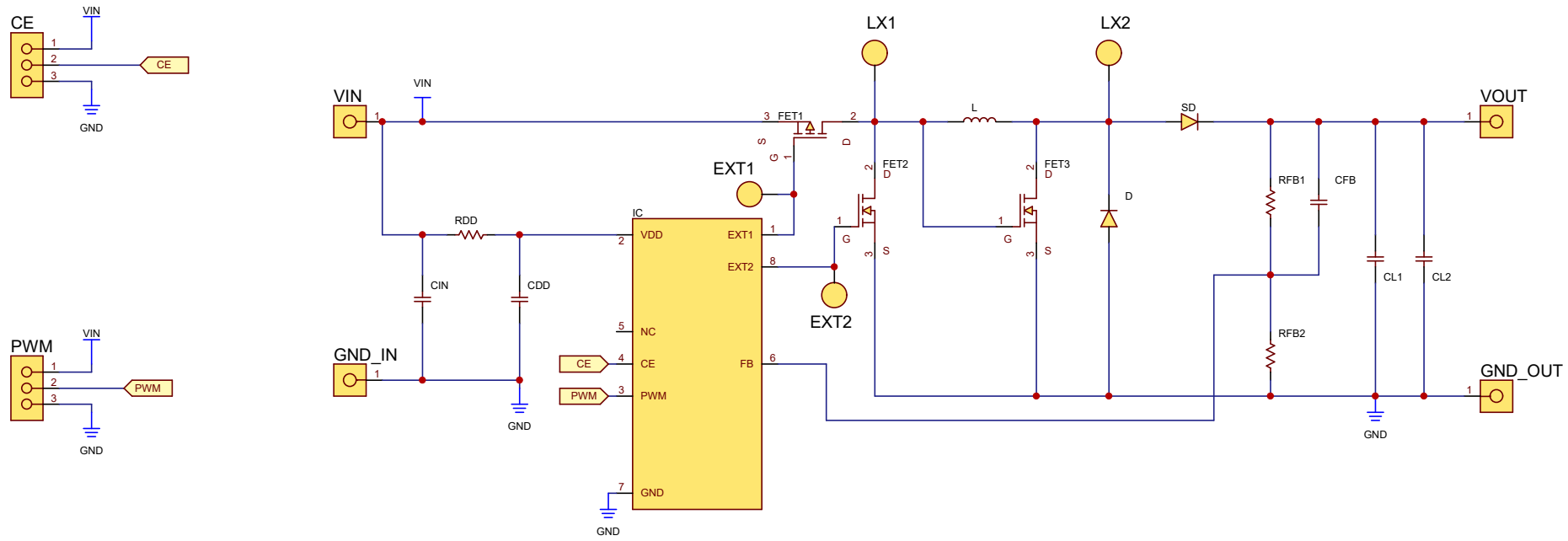

Series Name	XC9303
Category Name	Step-Up & Down DC/DC Controller
Packages	MSOP-8A
TOREX SEMICONDUCTOR	A4
	1 / 1