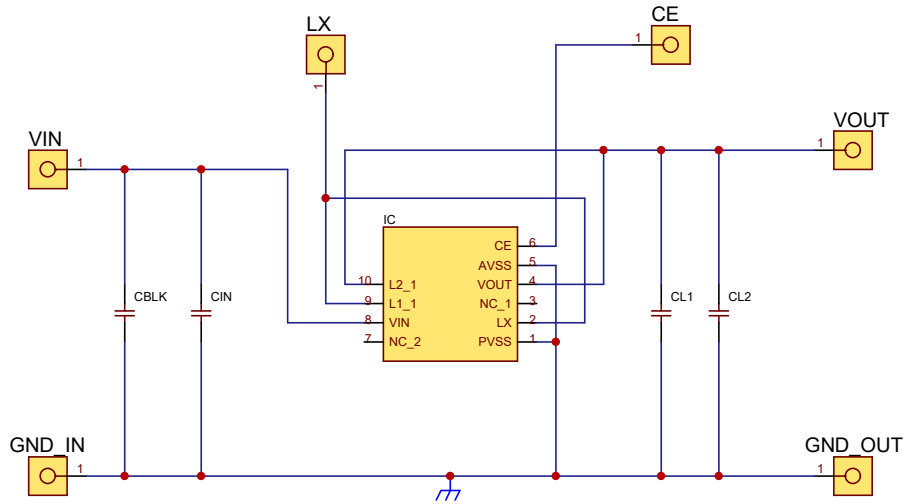

Series Name	XCL208/XCL209 Vout
Category Name	Inductor Built-in DC/DC Converters
Packages	-

TOREX SEMICONDUCTOR

A4

1 / 1